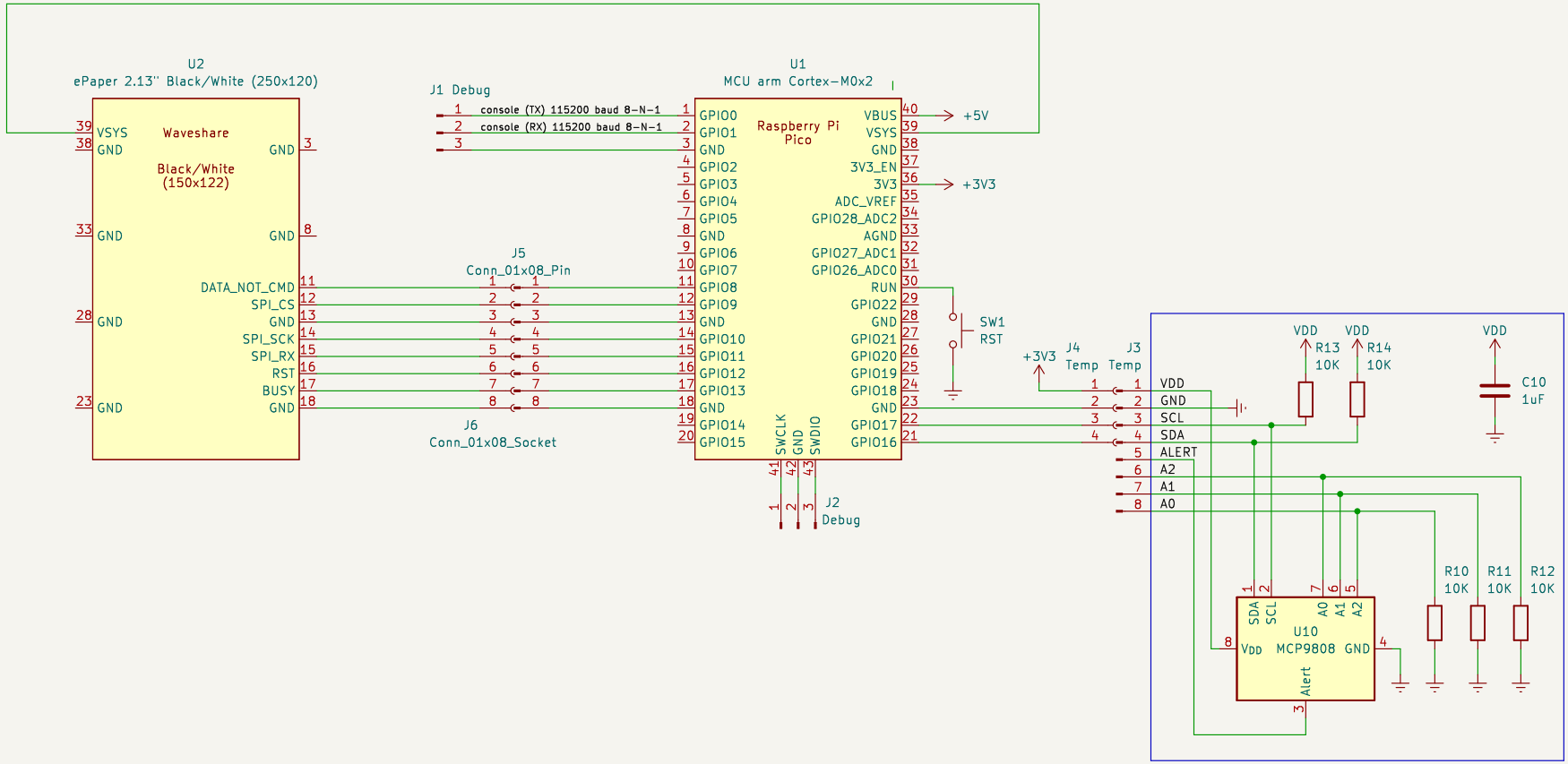

NOTE: Powered via micro USB connector on the Pico module

https://github.com/AnotherJohnH/picoPloT

Sheet: /

File: picoPloT.kicad_sch

Title: picoPloT

Size: A4	Date: 2024-01-31	Rev: 0.01
KiCad E.D.A. kicad 7.0.7		Id: 1/1